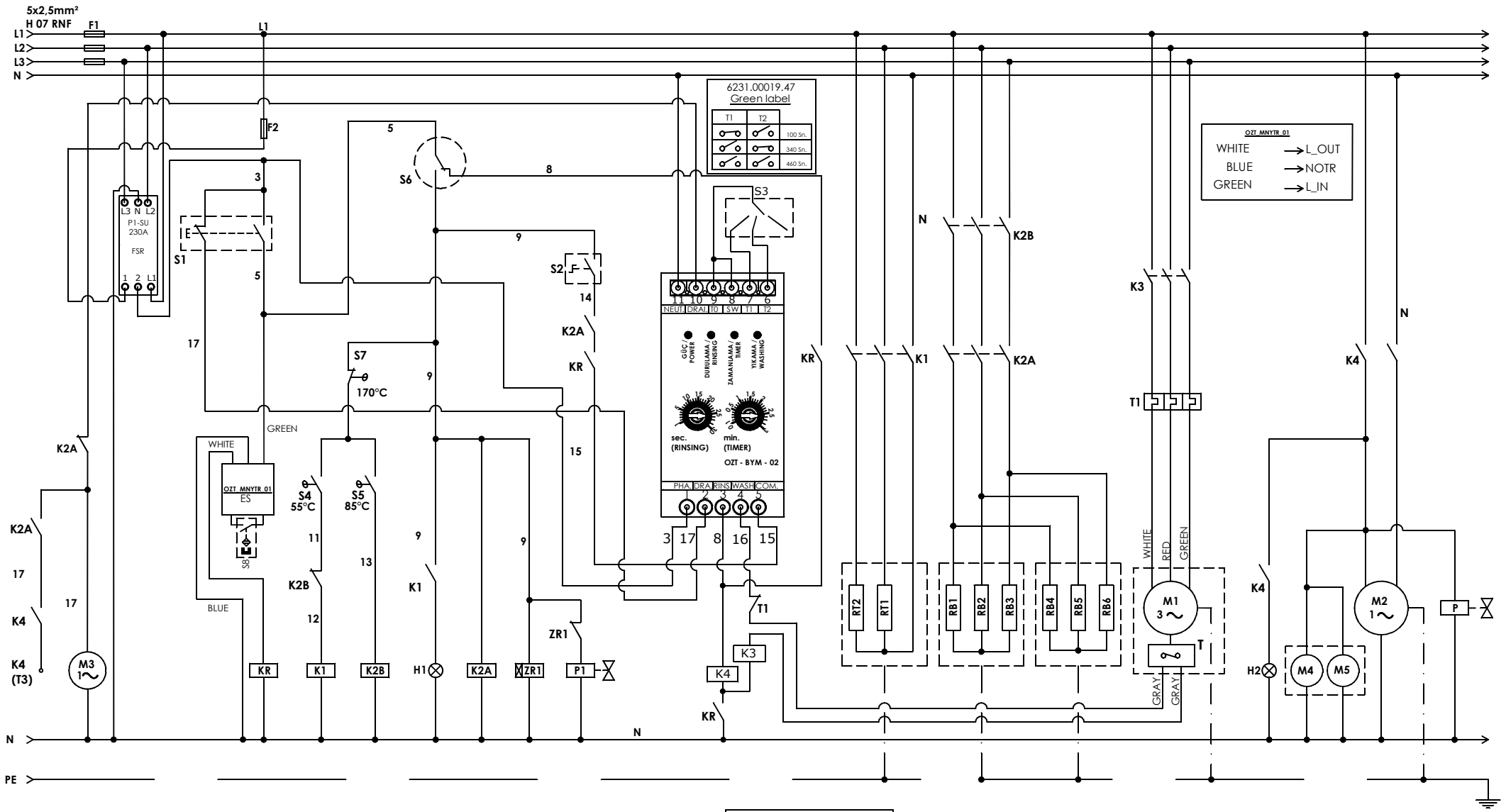

COMPONENT LIST			
F1:Main Fuse	S7:Boiler Safety Thermostat	KR:Control Relay	M3:Drain Pump
F2:Control Fuse	S8:Cover Switch	H1:Tank Heating Warning Lamp	M4:Detergent Pump
S1:On/Off and Drain Switch	P:Selenoid Valve	H2:Water Intake and Rinse Signal Light	M5:Rinsing Pump
S2:Start Washing	P1:Additional Water Valve	ZR:Program Timer	ES: Electronic Switching Board
S3:Program Key	K1:Tank Heater Contactor	ZR1:Additional Water Time	FSR:Phase Supply Control Relay
S4:Tank Thermostat	K2A-K2B:Boiler Heater Contactors	T1:Motor Termic Relay	T: Thermal Protection
S5:Boiler Thermostat	K3:Washing Pump Contactor	M1:Wash Pump	
S6:Water Level Key	K4:Rinsing Pump Contactor	M2:Rinse Pump	

CABLE NUMBERS

CABLE NO	CABLE COLORS	8	GREY	16	WHITE-RED	T3	PINK-BLACK
1	BROWN	9	WHITE	17	PURPLE-WHITE	T4	PINK-WHITE
2	RED	10	BLUE-RED	L	GREY-GREEN	T5	PINK-BLUE
3	ORANGE	11	BLUE-BLACK	L1	GREY-BLACK	N	BLUE
4	YELLOW-RED	12	ORANGE-GREEN	L2	GREY-WHITE	PE	YELLOW-GREEN
5	PINK	13	ORANGE-BLUE	L3	GREY-BLUE		
6	BLUE-WHITE	14	GREY-RED	T0	ORANGE-BLACK		
7	PURPLE	15	BLACK-WHITE	T1	ORANGE-WHITE		

ZR
1:Phase
2:Washing
3:Com
4:Rinsing
10: T3-340 sec.
11: T4-460 sec.
13: Neutral
14: T0
16: T1-100 sec.

OKY	Utensil Washing Machine	Proje no: OKY	Drawing no: OKY_eng	Rev: 1	Created by: M. HACI
		Date: 06.01.2025	Version: V 24.08		Page: 1/1